CS
CODE AND SPECIFICATIONS SHEET

Pressure Transmitter

EPR-N7, EPR-N7E

EPR-N7, EPR-N7E is intelligent transmitter equipped with semiconductor sensers and micro processors.

STANDARD SPECIFICATIONS

Model EPR-N7, EPR-N7E (high accuracy type)

Pressure range

●EPR-N7

Range Code	Measuring Span	Settable Range Limits
G20 HG20	20kPa to 2MPa	-98kPa≦LRV≦2MPa, -98kPa≦URV≦2MPa
G100 HG100	0.1 to 10MPa	-98kPa≦LRV≦10MPa, -98kPa≦URV≦10MPa
G500 HG500	5 to 50MPa	-98kPa≦LRV≦50MPa, -98kPa≦URV≦50MPa

●EPR-N7E

Range Code	Measuring Span	Settable Range Limits
G20 HG20	20kPa to 2MPa	-98kPa≦LRV≦2MPa, -98kPa≦URV≦2MPa
G100 HG100	0.1 to 10MPa	-98kPa≦LRV≦10MPa, -98kPa≦URV≦10MPa
G500 HG500	5 to 50MPa	-98kPa≦LRV≦50MPa, -98kPa≦URV≦50MPa

Note) URV is the input pressure to give 100% (20mA DC) output.
LRV is the input pressure to give 0% (4mA DC) output.

Output 4 to 20mA DC

Power supply voltage 11.4 to 42.0V DC

Allowable load resistance 600Ω (at 24V DC power supply voltage)

Communication line condition

Power supply voltage 16.7 to 42.0V DC

Load resistance 250Ω to 1.2kΩ
(Refer to Fig. 1 for the relation between power supply voltage and load resistance)

Accuracy

●EPR-N7

Range Code	Accuracy	
G20	±0.2%	X is more than 0.2MPa
HG20	±[0.1+(0.1×0.2/X)]%	X is less than 0.2MPa
G100	±0.2%	X is more than 1MPa
HG100	±[0.1+(0.1×1/X)]%	X is less than 1MPa
G500 HG500	±0.2%	

●EPR-N7E

Range Code	Accuracy	
G20	±0.1%	X is more than 0.2MPa
HG20	±[0.05+(0.05×0.2/X)]%	X is less than 0.2MPa
G100	±0.1%	X is more than 1MPa
HG100	±[0.05+(0.05×1/X)]%	X is less than 1MPa
G500 HG500	±0.15%	

Note) Accuracy is percent value against X, and X is the largest value among absolute value of URV, LRV and measuring span. Unit is MPa.

Zero adjustment Externally adjustable within ± 100% of measurement span.

Accidental burn out Can select any one among burn up, burn down and without burn out.

Dead time Approx. 0.4sec

Damping time constant (Amplifier time constant) Adjustable from 0.2 to 102.4sec (0.1sec increment) electrically by the DCR of the HART® communicator.

Time constant Transmitter time constant equals sum of damping time constant (amplifier time constant) and dead time.

Storage temperature limits -40 to 85℃

Operating humidity limits 5 to 100%RH

Operating temperature limits

Ambient temperature limits
-20 to 85℃ (See Fig.2)

Wetted parts temperature limits
-20 to 120℃

Working pressure limits The upper limit value of settable range limits. (See Fig.3 for working range of negative pressure)

Over pressure limits The upper limit value of settable range limits × 1.5

Site vibration Less than 29.4m/s^2 continuous vibration

Temperature effect (at −20 to 60℃)

●EPR-N7

Range Code	Temperature Characteristic		
G20 HG20	Zero shift	±[0.05+(0.3×T/50)]%	X is more than 0.8MPa
		±[0.05+(0.15+0.15×0.8/X)×T/50]%	X is less than 0.8MPa
	Overall shift	±[0.05+(0.55×T/50)]%	X is more than 0.8MPa
		±[0.05+(0.4+0.15×0.8/X)×T/50]%	X is less than 0.8MPa
G100 HG100	Zero shift	±[0.05+(0.3×T/50)]%	X is more than 4MPa
		±[0.05+(0.15+0.15×4/X)×T/50]%	X is less than 4MPa
	Overall shift	±[0.05+(0.55×T/50)]%	X is more than 4MPa
		±[0.05+(0.4+0.15×4/X)×T/50]%	X is less than 4MPa
G500 HG500	Zero shift	±[0.05+(0.3×T/50)]%	X is more than 20MPa
		±[0.05+(0.15+0.15×20/X)×T/50]%	X is less than 20MPa
	Overall shift	±[0.05+(0.55×T/50)]%	X is more than 20MPa
		±[0.05+(0.4+0.15×20/X)×T/50]%	X is less than 20MPa

●EPR-N7E

Range Code	Temperature Characteristic		
G20 HG20	Zero shift	±[0.05+(0.2×T/50)]%	X is more than 0.8MPa
		±[0.05+(0.15+0.05×0.8/X)×T/50]%	X is less than 0.8MPa
	Overall shift	±[0.05+(0.45×T/50)]%	X is more than 0.8MPa
		±[0.05+(0.4+0.05×0.8/X)×T/50]%	X is less than 0.8MPa
G100 HG100	Zero shift	±[0.05+(0.2×T/50)]%	X is more than 4MPa
		±[0.05+(0.15+0.05×4/X)×T/50]%	X is less than 4MPa
	Overall shift	±[0.05+(0.45×T/50)]%	X is more than 4MPa
		±[0.05+(0.4+0.05×4/X)×T/50]%	X is less than 4MPa
G500 HG500	Zero shift	±[0.05+(0.25×T/50)]%	X is more than 20MPa
		±[0.05+(0.15+0.1×20/X)×T/50]%	X is less than 20MPa
	Overall shift	±[0.05+(0.5×T/50)]%	X is more than 20MPa
		±[0.05+(0.4+0.1×20/X)×T/50]%	X is less than 20MPa

Note) Temperature efffect is percent value against X, X is the largest value among absolute value of URV, LRV and measuring span, and unit is MPa.
T is temperature variation width (℃).

Material

Diaphragm	Hastelloy C (Diaphragm material shall be selected considering corrosion resistance, hydrogen transmission, etc.)
Wetted parts other than diaphragm	SUS316
Amplifier case	Aluminum alloy
Mounting plate	SPCC (acid resistant coating)
U bolt	SUS304

Filled liquid Silicone oil

Process connection Top connection Rc1/2

Electrical connection G1/2

Check terminal With output check terminal (output voltage 40～200mV DC)

Certifications Protection level JIS C 0920 IP 67

Surge absorber Built-in transmitter
Surge capacity : 1,000A (8/20 μs)
Impulse test voltage : 15,000V (1.2/50 μs)

Finish Light gray amplifier case (acid resistant coating)

Weight Approx. 2.8kg (range code : G20, G100)
Approx. 3.3kg (range code : G500)

Installation On 2-inch pipe with U bolt.

Accessories 2-inch pipe mounting bracket and U-bolt.
Zero adjustment magnet.

ADDITIONAL SPECIFICATION

Communication method HART® protocol

Structure

TIIS Ex explosion proof type

Flameproof
Exdo II CT4
Exdo II CT4X
Note) X is for operating condition (as below)
With meter : Abnormality code is displayed on meter to alert winking, so it is no need to build external alarm display system.
Without meter : it is necessary to build external alarm display system, output exceeds 21mA
Ambient temperature limits : −20 to 55℃
Wetted parts temperature limits : −20 to 100℃
Electrical connection
X-RCAC type pressure resistant packing fixture must be used for using pressure resistant oil filled explosion proof type products. (also applicable to use SXBM-16B made by Shimada Electric Co., Ltd.)

FM explosion proof type

Explosion proof CLI,DIV 1,GPS B,C&D
Dust-ignition proof CLⅡ/Ⅲ,GPS E,F&G
Temperature Code T4
NEMA 4X
Ambient temperature limits : −40 to 60℃
Wetted parts temperature limits: −40 to 120℃

Indicator Digital indicator 4.5figures display (0 to 100% scale standard)
(Can set to arbitrary scale within the range of −17,500 to 17,500)
Scale plates for variou units to be sticked are supplied.

Wetted parts material

Diaphragm	Wetted Parts
SUS316L	SUS316
SUS316L	SUS316L
Hastelloy C	SUS316L
Hastelloy C	Hastelloy C
Tantalum	SUS316
Tantalum	SUS316L
Tantalum	Tantalum
SUS316L (with gold plate)	SUS316

※ Material shall be selected considering corrosion resistance. In case hydrogen is present in measuring fluid, it is possible hydrogen transmission can be generated through diaphragm.
If corrosion resistance is not so important, we recommend SUS316L or SUS316 with gold plating because hydrogen transmission value of these Material is relatively low. (But it is difficult to prevent hydrogen transmission completely even if diaphragm of SUS316L with gold plating is applied)

Note) In case that Hastelloy C or Tantalum is used for wetted parts, the maximum working pressure shall be up to 7.5MPa. And process connection is fitted on side plane, so specify code PV4 or BPV4.

Filled liquid

Fluorine oil — Wetted parts temperature limits: -20 to 120℃ (See Fig.4 for negative pressure.) Specify also no-oil finish together for oxygen measurement

Silicone oil for sanitary use — Wetted parts temperature limits: -20 to 120℃ (See Fig.5 for negative pressure.)

Wetted parts finish — No oil finish or no-oil and no water finish

Process connection (With adapter) — Rc1/2,Rc1/4,1/2NPT,1/4NPT. 15A socket welding (socket screw-in type)

Replace fitting — Metal fittings for renewal of old type Hitachi transmitter are supplied

Steam jacket — To be attached to the sensor body (Steam temperature shall be set to get liquid contact temperature less than 120℃. But less than 100℃ for explosion proof type)

Drain vent plug — Thermal insulation type

Process fluid

Vacuum type — Wetted parts temperature limits: -20 to 120℃ Filled liquid is the same as standard specification (Workable pressure is different depending on temperature. Use after confirming Fig.3.)

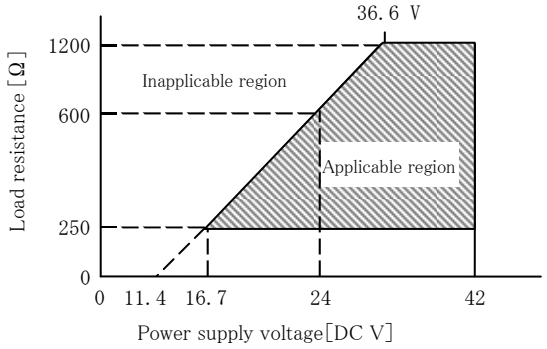

A minimum load resistance of 250Ω shall be required to communicate by connecting to communicator.

Fig.1 Supply voltage / load resistance property of transmitter

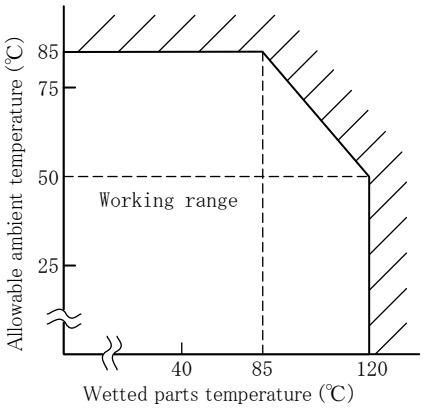

Fig.2 Wetted parts temperature and allowable ambient temperature

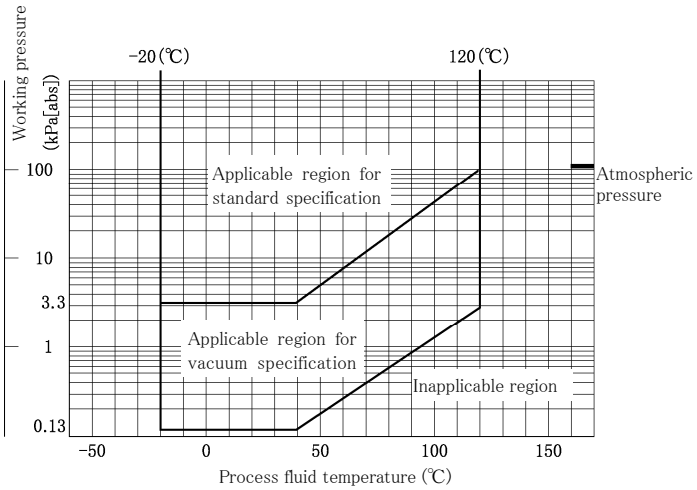

Fig.3 Working pressure and process fluid temperature

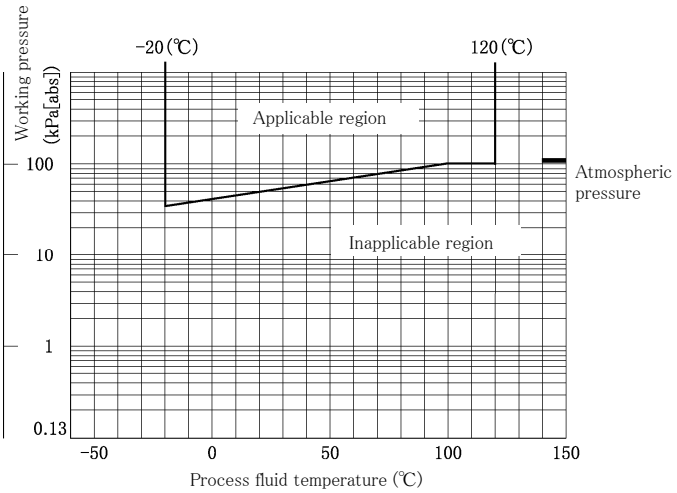

Fig.5 Working pressure and process fluid temperature
(filled liquid : Silicone oil for sanitary use)

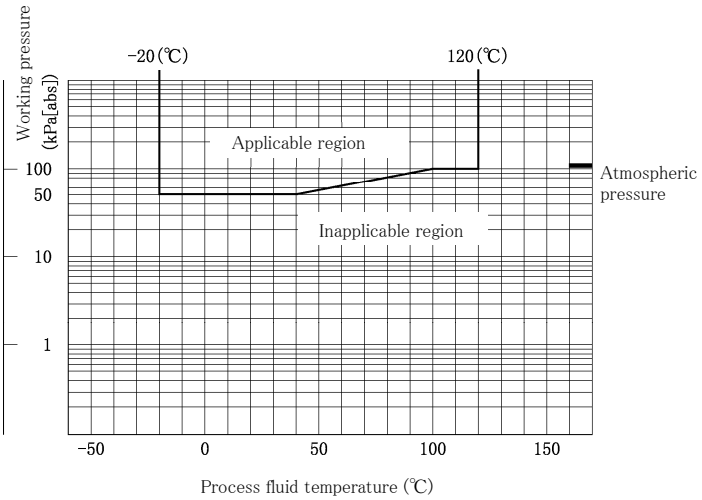

Fig.4 Working pressure and process fluid temperature
(Filled liquid : Fluorine oil)

EXTERNAL CONNECTION

Without local indicator

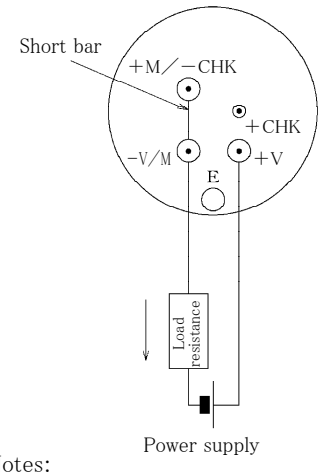

With local indicator connected

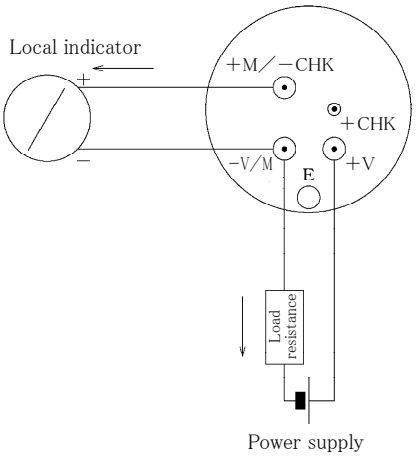

Notes:

(1) Grounding shall be done according to class D grounding practice (grounding resistance less than 100Ω)

(2) Grounding shall be done at one point either transmitter side or receiver instrument side. Give attention to avoid grounding at two points.

(3) Grounding terminals on transmitter side are furnished inside of terminal box and outside of amplifier case. Either of them can be utilized.

DIMENSIONS (Unit : mm)

＜Range code ： G20, G100＞

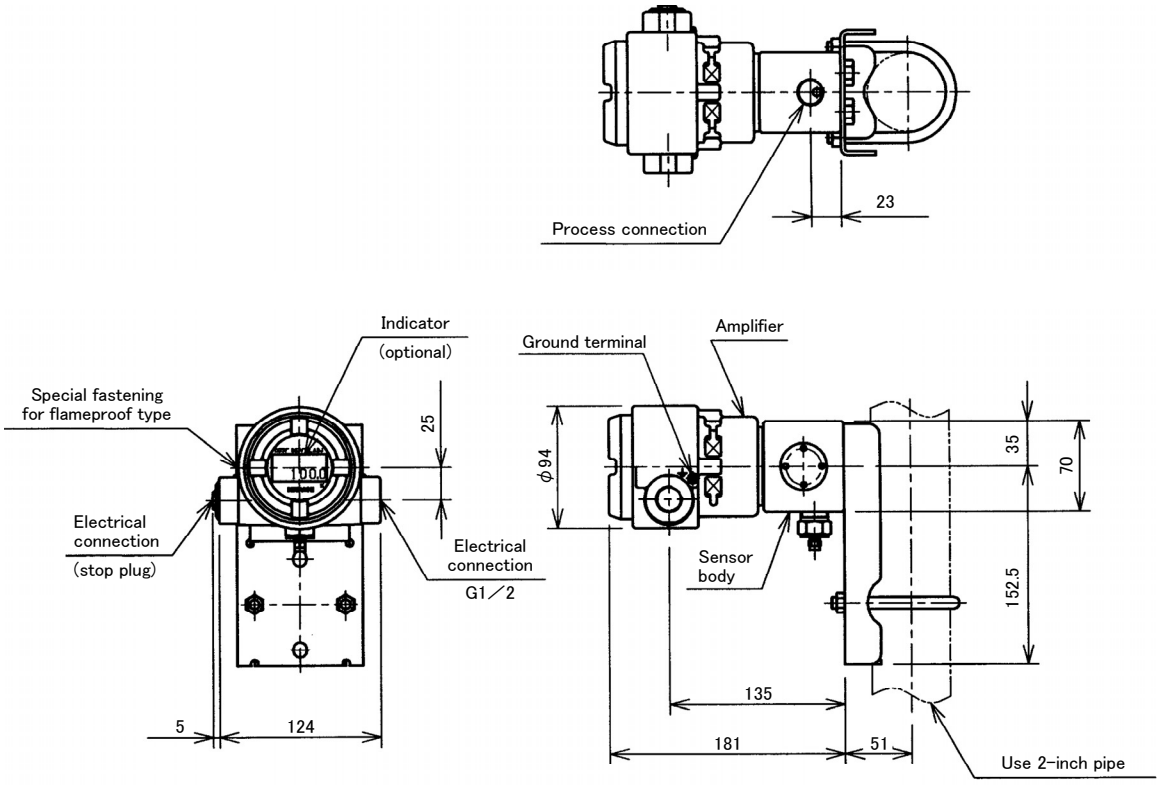

＜Range code ： G500＞

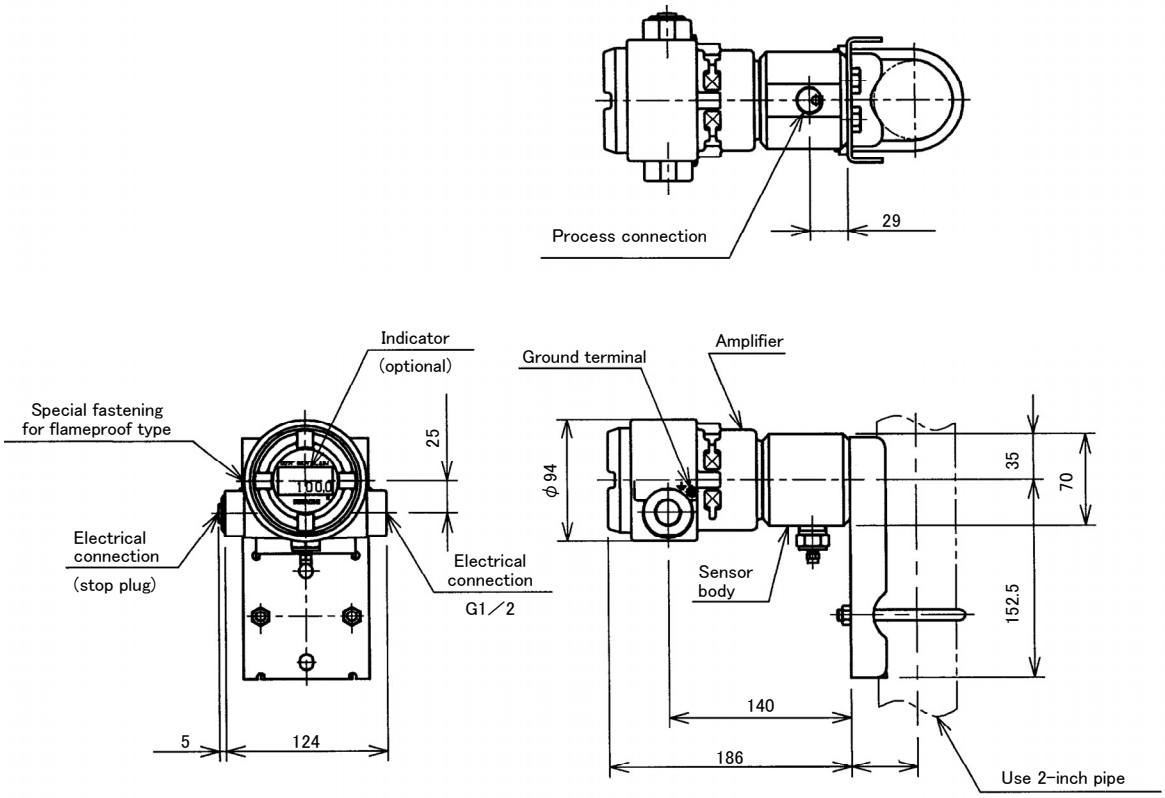

【Process connection code PV4】

＜Range code : G20, G100＞

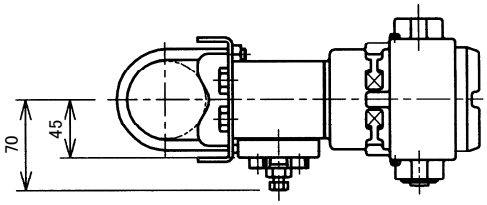

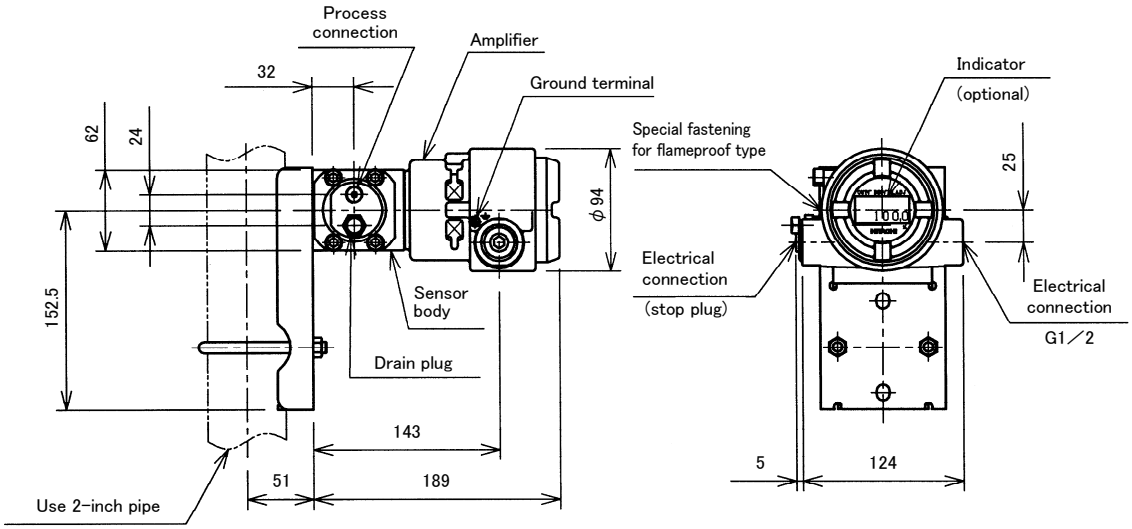

CODE TABLES

EPR-N7

No., Item	1	2～9	
Model	Range code	Option	Description
EPR-N7			Water-proof, diaphragm material ; Hastelloy C,
	G20		wetted parts other than diaphragm ; SUS316,
	G100		top process connection Rc1/2,
	G500		U-bolt material, SUS304, without indicator
	HG20		HART® communication type
	HG100		
	HG500		
		−□−□	Select a necessary code alone among those in the optional code table below.

OPTION

No.	Item	Code	Description
2	Adjustable range	C( )	Enter adjustable range and unit in parenthesis.
3	Certification	XC	TIIS Explosion proof standard approval
		FM	FM explosion proof approval
4	Indicator	M	Digital indicator
		MJ( )	Digital indicator and actual scale display Fill in ( ) with scale and unit mark
5	Wetted parts Material	HC316L	Diaphragm : Hastelloy C, Wetted parts other than diaphragm : SUS316L
		HC	Diaphragm : Hastelloy C, Wetted parts other than diaphragm : Hastelloy C Process connection code PV4 or BPV4 should be specified (Only for G20, G100, HG20 and HG100)
		TA316	Diaphragm : Tantalum, Wetted parts other than diaphragm : SUS316
		TA316L	Diaphragm : Tantalum, Wetted parts other than diaphragm : SUS316L
		TA	Diaphragm : Tantalum, Wetted parts other than diaphragm : Tantalum Process connection code PV4 or BPV4 should be specified (Only for G20, G100, HG20 and HG100)
		316L316	Diaphragm : SUS316L, Wetted parts other than diaphragm : SUS316
		316L	Diaphragm : SUS316L, Wetted parts other than diaphragm : SUS316L
		AU316	Diaphragm : SUS316L with gold plate, Wetted parts other than diaphragm : SUS316
6	Filled liquid	FO	Fluorine oil
		100CS	Silicone oil for sanitary use
7	No-oil	NL	No-oil finish
		NLW	No-oil and dehydrating finish
8	Process connections	R4	Top connection Rc1/4 (with adapter)
		N2	Top connection 1/2-14NPT (with adapter)
		N4	Top connection 1/4-18NPT (with adapter)
		S2	Top connection 1/2 inch pipe insertion welding (with adapter)
		PV4	Top connection at side Rc1/4
		B0	Bottom connection Rc1/2
		BR4	Bottom connection Rc1/4 (with adapter)
		BN2	Bottom connection 1/2-14NPT (with adapter)
		BN4	Bottom connection 1/4-14NPT (with adapter)
		BS2	Bottom connection 1/2 inch pipe insertion welding (with adapter)
		BPV4	Bottom connection at side Rc1/4
9	Replacing parts	RP78・G100( )	Model EPR72/75/85 (G100 or less)
		RP78・G500( )	Model EPR72/75/85 (G500)
		RP71・G100	Model EPR71 (G100 or less)
		RP71・G500	Model EPR71 (G500)
		RP3・G100( )	Model EPR3/22/31 top connection (G100 or less)
		RP3・G100B( )	Model EPR3/22/31 bottom connection (G100 or less)
		RP3・G500( )	Model EPR3/22/31 top connection (G500)
		RP3・G500B( )	Model EPR3/22/31 bottom connection (G500)
		RPP3・B	Model PPR-3/3I bottom connection
10	Steam jacket	ST	with steam jacket
		P	Drain/vent plug for winterizing type
11	Process fluid condition	V	Vacuum type

Note) Please select the material of the diaphragm in consideration of corrosion resistance.
Hastelloy C might generate the hydrogen permeation by the galvanizing steel pipe piping and the water quality, etc., and cause the output shift and the transformation of the diaphragm.
Please select small SUS316L of the hydrogen permeation when there is no problem in corrosion resistance.

No., Item	1	2～9	
Model	Range code	Option	Description
EPR-N7			Water-proof, diaphragm material ; Hastelloy C,
	G20		wetted parts other than diaphragm ; SUS316,
	G100		top process connection Rc1/2,
	G500		U-bolt material, SUS304, without indicator
	HG20		HART® communication type
	HG100		
	HG500		
		−□−□	Select a necessary code alone among those in the optional code table below.

OPTION

No.	Item	Code	Description
2	Adjustable range	C( )	Enter adjustable range and unit in parenthesis.
3	Certification	XC	TIIS Explosion proof standard approval
		FM	FM explosion proof approval
4	Indicator	M	Digital indicator
		MJ( )	Digital indicator and actual scale display Fill in ( ) with scale and unit mark
5	Wetted parts Material	HC316L	Diaphragm : Hastelloy C, Wetted parts other than diaphragm : SUS316L
		316L316	Diaphragm : SUS316L, Wetted parts other than diaphragm : SUS316
		316L	Diaphragm : SUS316L, Wetted parts other than diaphragm : SUS316L
		AU316	Diaphragm : SUS316L with gold plate, Wetted parts other than diaphragm : SUS316
6	Filled liquid	FO	Fluorine oil
		100CS	Silicone oil for sanitary use
7	No-oil	NL	No-oil finish
		NLW	No-oil and dehydrating finish
8	Process connections	R4	Top connection Rc1/4 (with adapter)
		N2	Top connection 1/2-14NPT (with adapter)
		N4	Top connection 1/4-18NPT (with adapter)
		S2	Top connection 1/2 inch pipe insertion welding (with adapter)
		B0	Bottom connection Rc1/2
		BR4	Bottom connection Rc1/4 (with adapter)
		BN2	Bottom connection 1/2-14NPT (with adapter)
		BN4	Bottom connection 1/4-18NPT (with adapter)
		BS2	Bottom connection 1/2 inch pipe insertion welding (with adapter)
9	Replacing parts	RP78・G100( )	Model EPR72/75/85 (G100 or less)
		RP78・G500( )	Model EPR72/75/85 (G500)
		RP71・G100	Model EPR71 (G100 or less)
		RP71・G500	Model EPR71 (G500)
		RP3・G100( )	Model EPR3/22/31 top connection (G100 or less)
		RP3・G100B( )	Model EPR3/22/31 bottom connection (G100 or less)
		RP3・G500( )	Model EPR3/22/31 top connection (G500)
		RP3・G500B( )	Model EPR3/22/31 bottom connection (G500)
		RPP3・B	Model PPR-3/3I bottom connection
10	Steam jacket	ST	with steam jacket
		P	Drain/vent plug for winterizing type
11	Process fluid condition	V	Vacuum type

Note) Please select the material of the diaphragm in consideration of corrosion resistance.
Hastelloy C might generate the hydrogen permeation by the galvanizing steel pipe piping and the water quality, etc., and cause the output shift and the transformation of the diaphragm.
Please select small SUS316L of the hydrogen permeation when there is no problem in corrosion resistance.

●HART® is a registered trademark of the HART Communication Foundation.
●Be sure to read the User's Manual to ensure correct, safe use.
●Some specifications and design are subject to change with or without notice for improvement of quality and performance.

Hitachi High-Tech Solutions Corporation
http://www.hitachi-hitec-solutions.com
24-14, Nishi-Shimbashi 1-chome, Minato-ku, Tokyo 105-8418, JAPAN
Tel: +81-3-3504-7311 Fax: +81-3-3504-7363
Hitachi High-Tech Control Systems Corporation
http://www.hitachi-hitec-hcs.com
500, Miyu-cho, Mito-shi, Ibaraki-ken, 319-0316, JAPAN
Tel: +81-29-257-5100 Fax: +81-29-257-5120